Hydraulic gear pump—Triple

Euroflange, 1:8, Group 2.

20-3A(C)../../..

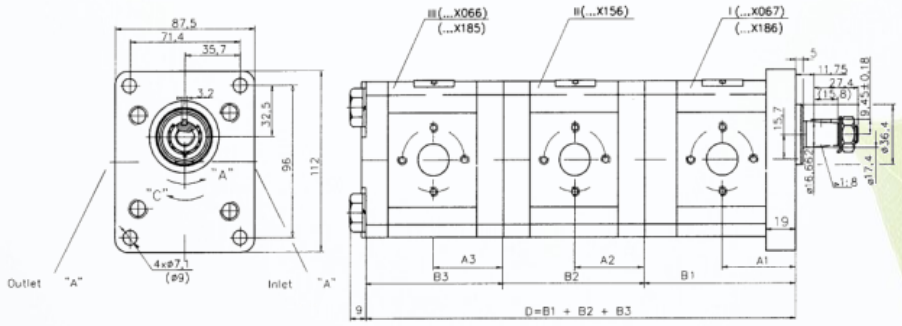

The gear pumps are designed to work under the following conditions:

- Working liquid: hydraulic oil with a viscosity of 16-200 mm²/s
- Filtration degree: 15-25 microns
- Ambient temperature range: -25-+55°C
- Fluid temperture range: -25-+80°C
- Inlet pressure, absolute: 0.8-2.2 bar
- Fluid speed (suction line) 0.5-1 m/s

I		
Model	**A1**	**B1**
20A(C)4.5X067	42.5	87.2
20A(C)6.3X067	44	90.2
20A(C)8.2X067	45.5	93.1
20A(C)10X067	47	96.2
20A(C)11X067	48	98.2
20A(C)12X067	48.6	99.5
20A(C)14X067	50	102.6
20A(C)15X067	51	104.1
20A(C)16X067	52	105.8
20A(C)19X067	54	110.7
20A(C)22X067	57	115.7
20A(C)25X067	59.2	120.6

II		
Model	**A2**	**B2**
20A(C)4.5X156	40.5	85.2
20A(C)6.3X156	42	88.2
20A(C)8.2X156	43.5	91.1
20A(C)10X156	45	94.2
20A(C)11X156	46	96.3
20A(C)12X156	46.6	97.5
20A(C)14X156	48	100.6
20A(C)15X156	49	102.1
20A(C)16X156	50	103.8
20A(C)19X156	52	108.7
20A(C)22X156	55	113.7
20A(C)25X156	57.2	118.6

III		
Model	**A3**	**B3**
20A(C)4.5X066	40.5	78
20A(C)6.3X066	42	81
20A(C)8.2X066	43.5	83.9
20A(C)10X066	45	87
20A(C)11X066	46	89.1
20A(C)12X066	46.6	90.3
20A(C)14X066	48	93.4
20A(C)15X066	49	95
20A(C)16X066	50	96.6
20A(C)19X066	52	101.5
20A(C)22X066	55	106.5
20A(C)25X066	57.2	112.1